bannerz CANADA
Signs & Exhibit Displays

Compact

File Size: 66.5"W x 39.25"H

Double Check.

- All linked images have been embeeded
- Save and send file as (PDF, EPS, AI)
- Important text and information is at least 2" away from all edges.
- DO NOT resize template and/or change size or shape.
- Convert all text to outlines
- Document should be setup in CMYK color mode.
- Use CMYK for gradients.
- Convert all text to outlines
- Use Pantone Solid Coated colors to ensure the best color matching. Final output will be in Solid Uncloated Colors.

* Please note that gradients and drop shadows may have different results than expected.

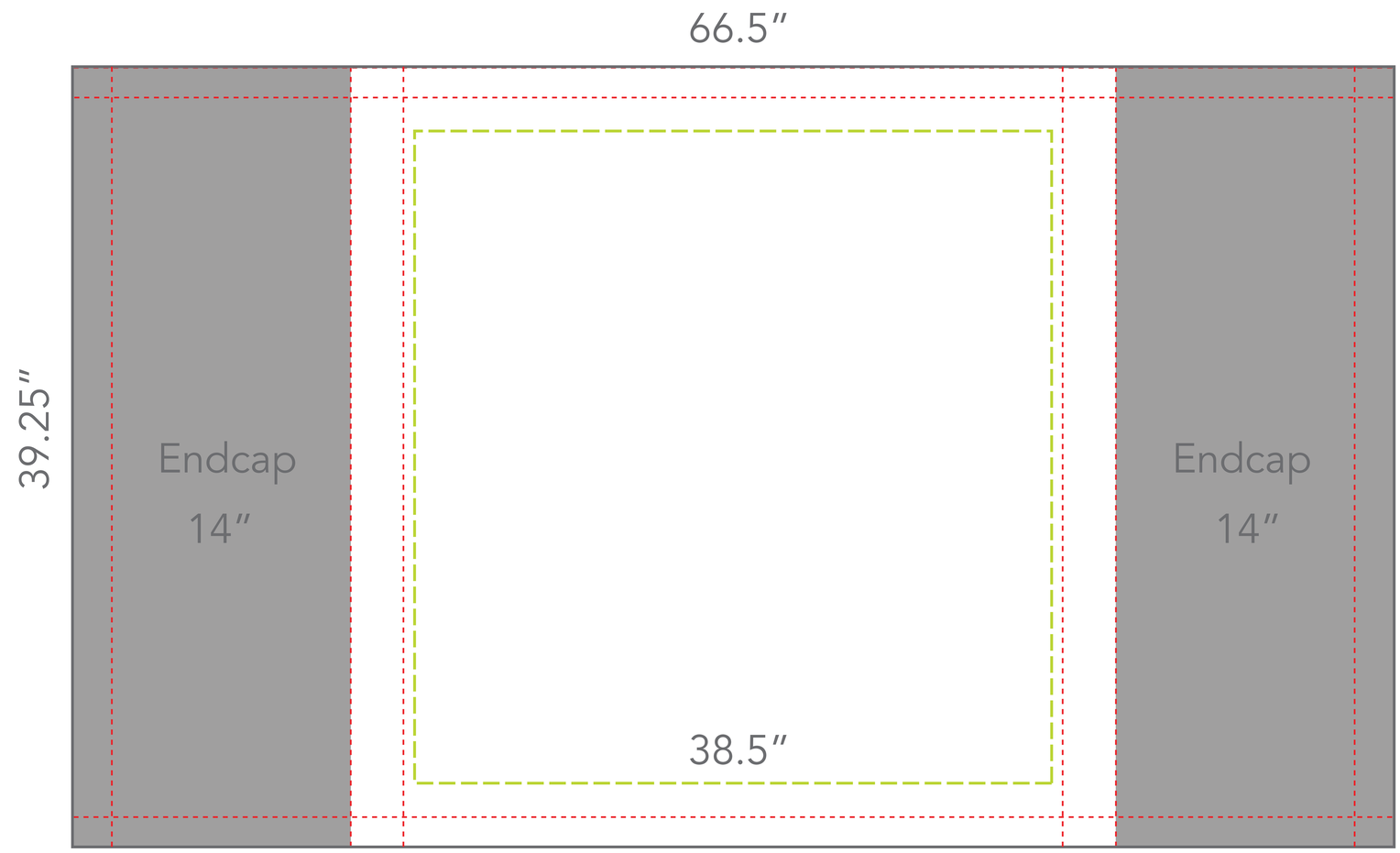

Safe Area
(Text & logos within this space)

Finished Size

Area wrapped aroud sides.
(VISIBLE FROM FRONT)

Stitch